450
1270

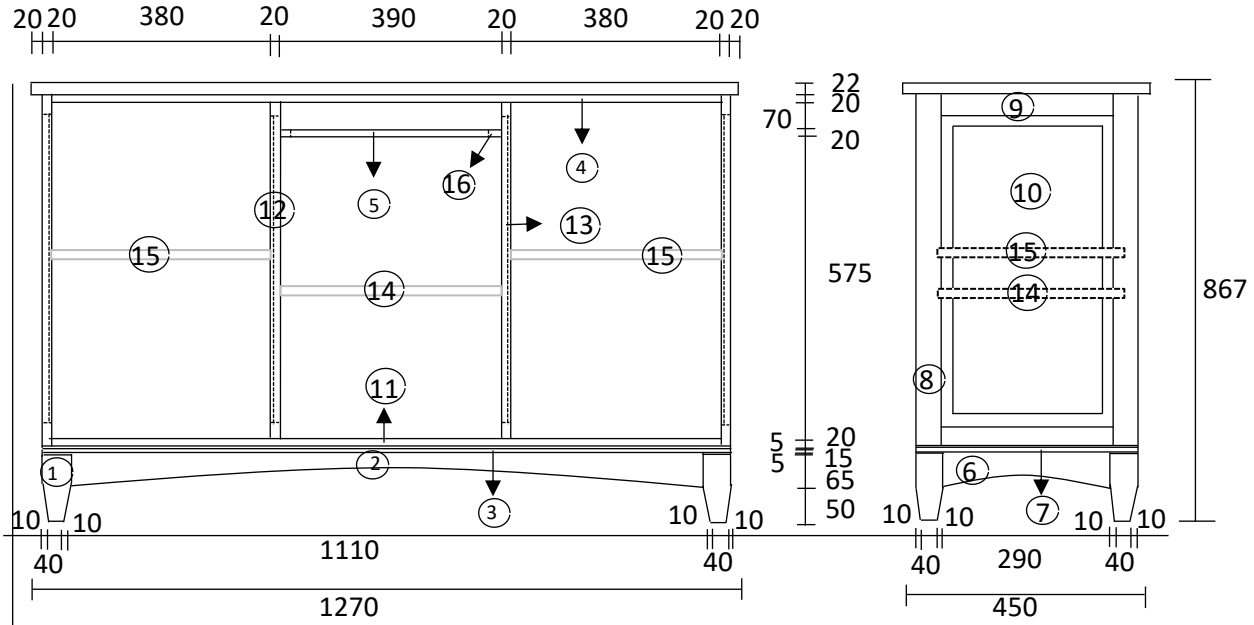
20 20 380 20 390 20 380 20 20
22
20
70
20
575
5 20
5 15
65
50
867
10 10 10 10
40 1110 40
1270
10 10 10 10
40 290 40
450

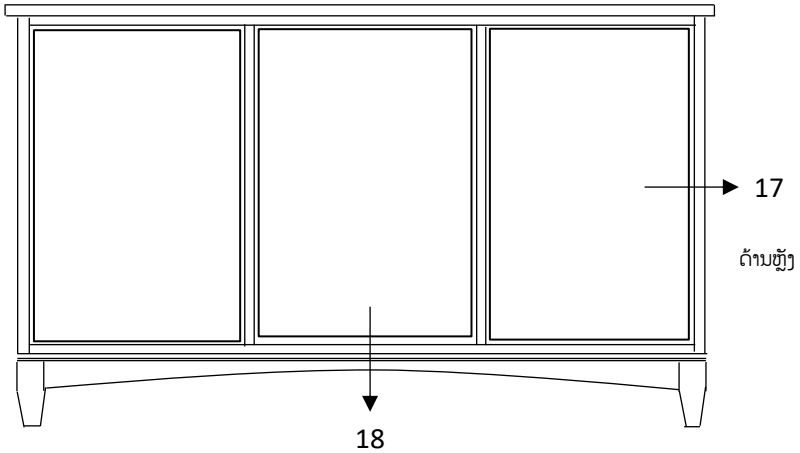
17
ด้านขวัง
18

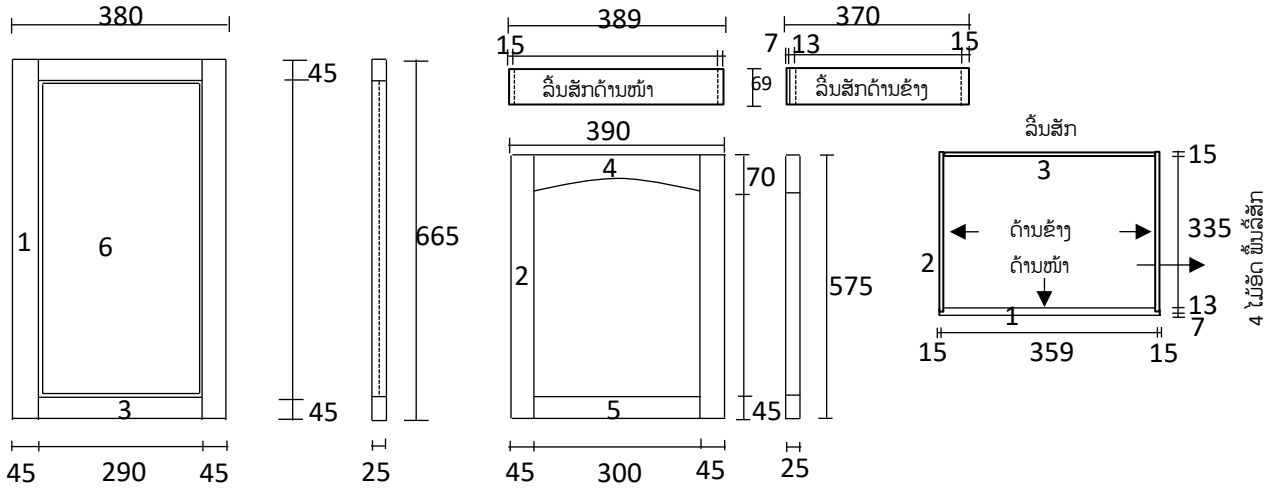

<u>ลายภาบไม้สำลับ บานตู้</u>

1. 25 x 45 x 705 = 4
2. 25 x 45 x 575 = 2
3. 25 x 45 x 340 = 4 (10 x 25 x 25)
4. 25 x 70 x 350 = 1 (10 x 50 x 25)
5. 25 x 45 x 350 = 1 (10 x 25 x 25)
6. 17x306x591

<u>ลายภาบไม้สำลับ ลิ้สัก</u>

1. 20 x 79 x 389 = 1
2. 15 x 79 x 363 = 2
3. 15 x 79 x 359 = 1
4. 3x375x347 (ไม้อัด 3มม)

<u>ลายภาบไม้สำลับโถงธ่างตู้</u>

1 60x60x120 = 4
2 25x70x1170= 2 (10x50x30)
3 20x40x1230= 2
4 20x40x1210= 2 (20x10x10)
5 20x40x410 = 1 (20x10x10)
6 25x70x350 = 2 (10x50x30)
7 20x40x410 = 2
8 20x40x705 = 4
9 20x40x380 = 8 (10x20x25)
10 17x348x641= 2
11 20x410x1210=1 (380x10x10)
12 20x40x685 =4
13 17x346x621 =2
14 17x358x388 = 1
15 17x358x378 = 2
16 20x20x370 = 2
17 17x390x675 = 2
18 18x400x675 = 1